INTERNATIONAL STANDARD

ISO 20176

Third edition
2020-09

Road vehicles — H-point machine (HPM-II) — Specifications and procedure for H-point determination

Véhicules routiers — Machine point H (HPM-II) — Spécifications et procédure pour la détermination du point H

Reference number
ISO 20176:2020(E)

© ISO 2020



COPYRIGHT PROTECTED DOCUMENT

© ISO 2020

All rights reserved. Unless otherwise specified, or required in the context of its implementation, no part of this publication may be reproduced or utilized otherwise in any form or by any means, electronic or mechanical, including photocopying, or posting on the internet or an intranet, without prior written permission. Permission can be requested from either ISO at the address below or ISO's member body in the country of the requester.

ISO copyright office
CP 401 • Ch. de Blandonnet 8
CH-1214 Vernier, Geneva
Phone: +41 22 749 01 11
Email: copyright@iso.org
Website: www.iso.org

Published in Switzerland

Contents

Page

Foreword ..... **v**

Introduction ..... **vi**

1 Scope **1**

2 Normative references **1**

3 Terms and definitions **1**

4 Measurement procedure for the three-dimensional H-point machine **3**
4.1 General 3
4.2 Summary of installation procedure 4
4.2.1 Summary 4
4.2.2 Measured versus design values 4
4.3 Prepare vehicle and seat 4
4.3.1 Vehicle 4
4.3.2 Seat 5
4.4 Determine the H-point travel path (optional) 5
4.5 Adjust seat to design intent 6
4.5.1 Move seat to design intent position 6
4.5.2 Torso angle and cushion angle 6
4.5.3 Seat in front of test seat 7
4.6 Install HPM cushion and back pan assembly 8
4.6.1 Install the cushion pan 8
4.6.2 Install the back pan 8
4.6.3 Level the HPM 9
4.7 Load the HPM 9
4.7.1 Procedure 9
4.7.2 Summary table 9
4.7.3 Load the cushion pan 10
4.7.4 Load the back pan 10
4.8 Soak time 11
4.9 Record measurements — digitize HPM points 11
4.9.1 General 11
4.9.2 H-point 11
4.9.3 Torso angle and cushion angle 12
4.9.4 Lumbar support prominence 12
4.9.5 Summary of driver measurements 12

5 Optional measurements for driver seat **12**
5.1 Leg and shoe installations 12
5.1.1 General 12
5.1.2 Mark accelerator pedal centreline 13
5.1.3 Install the shoe fixture 13
5.1.4 Install the shoe tool 13
5.1.5 Install leg segments 14
5.2 Record measurements 15
5.2.1 General 15
5.2.2 Shoe plane angle 16
5.2.3 Ball of foot reference point 16
5.2.4 Accelerator heel point 16
5.2.5 Accelerator heel point to ball of foot reference point lateral offset 18
5.2.6 Knee angle and ankle angle 18
5.2.7 Thigh angle and hip angle 18

6 Optional measurements for the 2nd or succeeding row passenger seats **18**
6.1 Leg and shoe installation 18
6.1.1 General 18

© ISO 2020 – All rights reserved

6.1.2 Install the shoe tool ... 18
6.1.3 Install leg segments ... 20
6.2 Record measurements for rear passengers ... 22
6.2.1 Summary of measurements ... 22
6.2.2 Floor reference point ... 23
6.2.3 Floor plane angle ... 23
6.2.4 Knee clearance and legroom ... 23
7 Additional optional measurements ... 24
7.1 Effective headroom ... 24
7.1.1 When to install headroom fixture ... 24
7.1.2 Install the headroom fixture ... 24
7.1.3 Measure effective headroom ... 24
8 Remove the HPM ... 24
Annex A (normative) **Description of the three-dimensional H-point machine (HPM) ... 26**
Annex B (informative) **HPM specification and tolerances ... 39**
Annex C (informative) **HPM field checking procedures ... 46**
Annex D (informative) **H-point design (HPD) tool description ... 63**
Bibliography ... 67

© ISO 2020 – All rights reserved

Foreword

ISO (the International Organization for Standardization) is a worldwide federation of national standards bodies (ISO member bodies). The work of preparing International Standards is normally carried out through ISO technical committees. Each member body interested in a subject for which a technical committee has been established has the right to be represented on that committee. International organizations, governmental and non-governmental, in liaison with ISO, also take part in the work. ISO collaborates closely with the International Electrotechnical Commission (IEC) on all matters of electrotechnical standardization.

The procedures used to develop this document and those intended for its further maintenance are described in the ISO/IEC Directives, Part 1. In particular, the different approval criteria needed for the different types of ISO documents should be noted. This document was drafted in accordance with the editorial rules of the ISO/IEC Directives, Part 2 (see www.iso.org/directives).

Attention is drawn to the possibility that some of the elements of this document may be the subject of patent rights. ISO shall not be held responsible for identifying any or all such patent rights. Details of any patent rights identified during the development of the document will be in the Introduction and/or on the ISO list of patent declarations received (see www.iso.org/patents).

Any trade name used in this document is information given for the convenience of users and does not constitute an endorsement.

For an explanation of the voluntary nature of standards, the meaning of ISO specific terms and expressions related to conformity assessment, as well as information about ISO's adherence to the World Trade Organization (WTO) principles in the Technical Barriers to Trade (TBT) see www.iso.org/iso/foreword.html.

This document was prepared by Technical Committee ISO/TC 22, *Road vehicles*, Subcommittee SC 39, *Ergonomics*.

This third edition cancels and replaces the second edition (ISO 20176:2011), of which it constitutes a minor revision. The changes compared to the previous edition are as follows:

— minor editorial changes;

— removal of reference to the cancellation and replacement of ISO 6549:1999.

Any feedback or questions on this document should be directed to the user's national standards body. A complete listing of these bodies can be found at www.iso.org/members.html.

© ISO 2020 – All rights reserved

Introduction

The tools and procedures for H-point determination given in this document are based on SAE J4002.

H-point devices are used during vehicle design and development to establish interior reference points and dimensions for occupant packaging, and to validate the location of these key reference points and dimensions on physical properties during audits.

H-point devices are also used for the design and validation of seats. However, in these instances, the reference points and dimensions are defined relative to the seat structure or surface, rather than the vehicle's interior. The procedures for positioning the H-point devices in seats do not require the use of the shoe tool or leg segments.

For convenience and simplicity, many terms associated with H-point devices use human body parts in their name. However, they should not be construed as measures that indicate occupant accommodation, human capabilities, or comfort. H-point devices do not represent the size or posture of any category of occupant.

Key differences from ISO 6549

Compared to the H-point machine (HPM) specified in ISO 6549, the HPM specified in this document provides improved repeatability, greater ease of use, as well as additional features and measurement capabilities. All efforts were made to achieve these improvements while minimizing their impact on the location of reference points and measurements. Several of the changes are discussed below.

1) **Separate components**

For this HPM, the legs (upper and lower), shoe, cushion pan and back pan are all separate pieces. This greatly improves the ease of installation.

2) **"Legless" manikin**

The H-point location is defined without having to attach the legs. This is a major advantage. The procedure specified in this document is based on installing the HPM without legs. Use of legs is optional.

3) **Shoe tool**

Several improvements were made to the shoe tool and how it is positioned in the vehicle, including:

i) replacing the pedal reference point (PRP) with a new ball of foot reference point (BOFRP);

ii) specifying a new procedure for positioning the shoe on the pedal.

4) **Cushion angle**

The cushion angle is now measured independently of thigh angle, and at the same time the other measurements are made. With the ISO 6549 HPM, cushion angle was measured from the thigh line, and required a separate installation of the HPM.

5) **Lumbar support**

The articulation of the back pan assembly allows the HPM specified in this document to be better seated in contoured seats. It also provides a measurement of lumbar support prominence (LSP). This measurement provides an indication of the amount the seat back is contoured to provide support for the lumbar spine. The contour of the back pan assembly is most similar to the ISO 6549 H-point machine when the HPM is in a neutral posture (LSP equals zero).

© ISO 2020 – All rights reserved

Changes from ISO 20176:2011

The procedures for auditing the seat are unchanged from the second edition.

In the second edition, the most significant change was that the ball of foot (BOF) of the shoe does not have to be on the pedal surface. The HPM shoe can contact the pedal at any point(s) on the bottom of the shoe. The term pedal reference point (PRP) was deleted (since the BOF may not be on the pedal) and replaced by a new term called the ball of foot reference point (BOFRP). The accelerator heel point (AHP) to BOF distance was changed from 200 mm to 203 mm to be consistent with ISO 6549, SAE J1100, and vehicle manufacturers around the world.

In addition, the following physical modifications were made to the HPM. The flat part of the shoe bottom was extended from 200 mm to 203 mm. A new scale was added to the top of the shoe to aid in determining the pedal contact point (PCP). A new H-point divot was added to allow coordinate measuring machine (CMM) point taking from above. The knee angle scale was recessed to improve its durability and reoriented to improve its readability. Several figures were revised to illustrate these changes.

Finally, the terms pedal plane and pedal plane angle (PPA) were replaced by shoe plane and shoe plane angle (SPA). These new terms more accurately convey the meaning. SPA is a side view angle that is provided by the vehicle manufacturer.

© ISO 2020 – All rights reserved

Road vehicles — H-point machine (HPM-II) — Specifications and procedure for H-point determination

1 Scope

This document provides the specifications and procedures for using the H-point machine (HPM)[1)] to audit vehicle seating positions. The HPM is a physical tool used to establish key reference points and measurements in a vehicle. The H-point design tool (HPD) is a simplified computer-aided design (CAD)[2)] version of the HPM, which can be used in conjunction with the HPM to take the optional measurements specified in this document, or used independently during product design.

These H-point devices provide a method for reliable layout and measurement of occupant seating compartments or seats. This document specifies the procedures for installing the H-point machine (HPM) and using the HPM to audit (verify) key reference points and measurements in a vehicle.

The devices are intended for application at designated seating positions. They are not to be construed as tools that measure or indicate occupant capabilities or comfort. They are not intended for use in defining or assessing temporary seating, such as folding jump seats.

2 Normative references

The following documents are referred to in the text in such a way that some or all of their content constitutes requirements of this document. For dated references, only the edition cited applies. For undated references, the latest edition of the referenced document (including any amendments) applies.

ISO 4130, *Road vehicles — Three-dimensional reference system and fiducial marks — Definitions*

SAE J1100, *Motor vehicle dimensions*

SAE J4002, *H-point machine (HPM-II) specifications and procedure for H-point determination — Auditing vehicle seats*

3 Terms and definitions

For the purposes of this document, the terms and definitions given in SAE J1100 and the following apply.

ISO and IEC maintain terminological databases for use in standardization at the following addresses:

— ISO Online browsing platform: available at https://www.iso.org/obp

— IEC Electropedia: available at http://www.electropedia.org/

3.1
H-point
point at the pivot centre of the back pan and cushion pan assemblies, located on the lateral centreline of the H-point device

Note 1 to entry: The H-point device can be the H-point machine (HPM) or the H-point design tool (HPD).

1) All references to H-point machine or HPM in this document refer to the SAE J4002 H-point machine (HPM-II), unless otherwise noted.

2) CAD has come to encompass any software system or approach to automotive design and development, and is often used to refer to CAE (computer-assisted engineering) and CAM (computer-assisted manufacturing) software systems as well.

© ISO 2020 – All rights reserved

Note 2 to entry: The H-point is also the intersection of the cushion line and the torso line. When an H-point device is properly positioned within a vehicle, either in CAD or in an actual physical property, the location of the H-point relative to the vehicle is used as a vehicle reference point. If the seat is moved, the location of the H-point within the vehicle is changed. Therefore, adjustable seats have more than one H-point location, while fixed seats have only one H-point location.

Note 3 to entry: H-points are often referred to as hip points or hip pivot points. They simulate, but do not precisely represent, the location of the human hip joint.

3.2
H-point travel path
all possible locations of the *H-point* (3.1) provided by the full range of seat adjustments (horizontal, vertical or tilt) for a given designated seating position

3.3
seating reference point
SgRP
R-point
manufacturer's intended location for a design *H-point* (3.1), which is specifically designated as R-point or SgRP, and which:

a) is the fundamental reference point used to establish occupant accommodation tools and dimensions;

b) simulates the position of the pivot centre of the human torso and thigh;

c) has coordinates established with respect to the designed vehicle structure;

d) establishes the rearmost normal design driving or riding H-point of each designated seating position, which accounts for all modes of adjustment, horizontal, vertical and tilt that are available for the seat, but does not include seat travel used for purposes other than normal driving and riding

Note 1 to entry: The SgRP is sometimes referred to as the design H-point.

3.4
accelerator heel point
AHP
point representing the heel of shoe location on the depressed floor covering, when the bottom of shoe is in contact with the undepressed accelerator pedal and the ankle angle is at 87°

Note 1 to entry: The lateral location (*y*-coordinate) is aligned with the *BOFRP* (3.5) unless shoe interference with side support structure causes an offset of the AHP from the BOFRP (see 5.1.4.2).

3.5
ball of foot reference point
BOFRP
point representing the ball of foot location on the shoe plane when the *H-point* (3.1) machine shoe is set to a specified *shoe plane angle* (3.8), the bottom of shoe is in contact with the undepressed accelerator pedal, the ball of foot is aligned with the lateral centreline of the undepressed accelerator pedal in rear view, and the heel of shoe is at the depressed floor covering

Note 1 to entry: The BOFRP and *AHP* (3.4) are at the same *y*-coordinate unless there is lateral shoe interference.

3.6
floor reference point
FRP
<rear passenger> point at the intersection of the heel of shoe and the depressed floor covering, with the bottom of shoe resting on the depressed floor covering

Note 1 to entry: FRP is determined within 127 mm to either side of centreline of occupant, with the shoe or lower leg segment moved forward to rest against the seat in front (contacting the underseat structure, lower portion of the seat back trim, etc.).

© ISO 2020 – All rights reserved

3.7
lumbar support prominence
LSP
measure of the back-pan shape imposed on the HPM by the contour of the lower seatback

Note 1 to entry: See Table A.4.

3.8
shoe plane angle
SPA
α_{SP}
angle from horizontal to the bottom of the HPM shoe when the shoe is in contact with the undepressed accelerator pedal and the shoe heel is at the *AHP* (3.4)

Note 1 to entry: SPA is provided by the vehicle manufacturer or calculated from the manufacturer's published seat height H30-1 (see 5.1.4).

4 Measurement procedure for the three-dimensional H-point machine

4.1 General

A complete description of the three-dimensional H-point machine is given in Annex A (see Figure 1). Specifications and tolerances are given in Annex B. A field checking procedure for the HPM is given in Annex C.

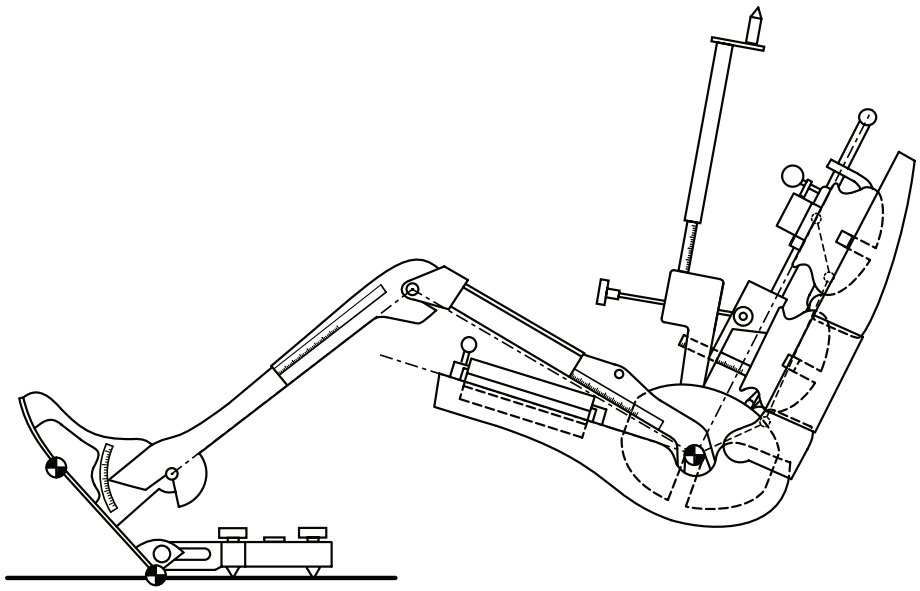

Figure 1 — Side view of HPM, including optional components

The HPM[3] includes divot points that can be used by a coordinate measuring machine (CMM) and in CAD[4] to fully define the location of the machine in the vehicle space (see A.2.3). Calibrated planar surfaces on the HPM facilitate field measurement of machine angles using an inclinometer. A scale readout indicates the lumbar support prominence (LSP) value. An ankle angle scale is provided to aid HPM installation in long-coupled passenger seating.

3) All references to H-point machine or HPM in this document refer to the SAE J4002 H-point machine (HPM-II), unless otherwise noted.

4) CAD has come to encompass any software system or approach to automotive design and development, and is often used to refer to CAE (computer-assisted engineering) and CAM (computer-assisted manufacturing) software systems as well.

© ISO 2020 – All rights reserved