INTERNATIONAL STANDARD

ISO 20144

First edition
2019-07

Fibre-reinforced plastic composites — Standard qualification plan (SQP) for composite materials, including reduced qualification plan (RQP) and extended qualification plan (EQP) schemes

Composites plastiques renforcés de fibres — Plan de qualification normalisé (PQN) pour matériaux composites, y compris les programmes pour plan de qualification réduit (PQR) et plan de qualification étendu (PQE)

Reference number
ISO 20144:2019(E)

© ISO 2019



COPYRIGHT PROTECTED DOCUMENT

© ISO 2019

All rights reserved. Unless otherwise specified, or required in the context of its implementation, no part of this publication may be reproduced or utilized otherwise in any form or by any means, electronic or mechanical, including photocopying, or posting on the internet or an intranet, without prior written permission. Permission can be requested from either ISO at the address below or ISO's member body in the country of the requester.

ISO copyright office
CP 401 • Ch. de Blandonnet 8
CH-1214 Vernier, Geneva
Phone: +41 22 749 01 11
Fax: +41 22 749 09 47
Email: copyright@iso.org
Website: www.iso.org

Published in Switzerland

Contents

Page

Foreword ..... **iv**
Introduction ..... **v**
1 Scope **1**
2 Normative references **1**
3 Terms and definitions **3**
4 Principle **4**
5 Test methods and specimen conditioning **4**
6 Test matrices and specimen sampling **5**
7 Apparatus **6**
8 Test plate preparation and specimen machining **11**
9 Test requirements **11**
9.1 Standard qualification plan 11
9.2 Extended qualification plan 11
9.3 Reduced qualification plan 11
10 Presentation of results — Standardized data sheets **11**
11 Statistical analysis **12**
12 Precision **12**
13 Test report **14**
Annex A (normative) **Report sheets** **15**
Annex B (normative) **Determination of statistical parameters** **19**
Bibliography **27**

© ISO 2019 – All rights reserved

Foreword

ISO (the International Organization for Standardization) is a worldwide federation of national standards bodies (ISO member bodies). The work of preparing International Standards is normally carried out through ISO technical committees. Each member body interested in a subject for which a technical committee has been established has the right to be represented on that committee. International organizations, governmental and non-governmental, in liaison with ISO, also take part in the work. ISO collaborates closely with the International Electrotechnical Commission (IEC) on all matters of electrotechnical standardization.

The procedures used to develop this document and those intended for its further maintenance are described in the ISO/IEC Directives, Part 1. In particular, the different approval criteria needed for the different types of ISO documents should be noted. This document was drafted in accordance with the editorial rules of the ISO/IEC Directives, Part 2 (see www.iso.org/directives).

Attention is drawn to the possibility that some of the elements of this document may be the subject of patent rights. ISO shall not be held responsible for identifying any or all such patent rights. Details of any patent rights identified during the development of the document will be in the Introduction and/or on the ISO list of patent declarations received (see www.iso.org/patents).

Any trade name used in this document is information given for the convenience of users and does not constitute an endorsement.

For an explanation of the voluntary nature of standards, the meaning of ISO specific terms and expressions related to conformity assessment, as well as information about ISO's adherence to the World Trade Organization (WTO) principles in the Technical Barriers to Trade (TBT) see www.iso.org/iso/foreword.html.

This document was prepared by Technical Committee ISO/TC 61, *Plastics*, Subcommittee SC 13, *Composites and reinforcement fibres*.

Any feedback or questions on this document should be directed to the user's national standards body. A complete listing of these bodies can be found at www.iso.org/members.html.

© ISO 2019 – All rights reserved

Introduction

This document has been prepared to provide suppliers, designers, end-users and regulators of fibre-reinforced plastic/composite materials, with an initial qualification framework aimed at reducing the substantial costs involved in qualifying materials against different bespoke company specifications, with varying degrees of commonality. Indeed, the cost associated with qualifying materials can prevent the use of new materials in certain applications or even the development of new materials themselves. In addition, designers and end-users often find that appropriate data for materials selection and preliminary design are not readily available or comparable. Widespread use of this document for initial qualification is intended to lead to a reduction in qualification costs and increased availability of reliable and robust materials data across a wide range of sectors and applications. It provides for more detailed qualification procedures, including calculation of B-basis design allowable, compared to ISO 10350-2.

Material suppliers are intended to adopt this procedure for obtaining the required data to support initial material selection and qualification; and to supply the specified data, in the format given in Annex A, at the same time as release of the material evaluated. This will greatly extend the availability of consistent and comparable materials data based on agreed individual, international test methods to support users, fabricators and regulators.

Validation has been undertaken for thermoset systems, which are currently the most abundant and established matrix-based systems. However, it is accepted[1] that the calculations, and therefore the property data, can also be applied to similar thermoplastic matrix-based systems.

Therefore, thermoplastic matrix-based systems can also be covered by the document, providing the underpinning test method's technical aspects are met regarding failure mode etc.; with the exclusion of property tests specifically designed for uncured thermoset materials, where indicated.

It is noted that, simultaneously, the underpinning test methods are themselves being reviewed for application to a wider range of fibre formats and matrices. Validation data will be added for thermoplastic matrix-based systems when international precision trials are conducted.

© ISO 2019 – All rights reserved

Fibre-reinforced plastic composites — Standard qualification plan (SQP) for composite materials, including reduced qualification plan (RQP) and extended qualification plan (EQP) schemes

1 Scope

1.1 This document specifies a procedure for the initial qualification of composite materials in order to allow quality control, material selection and preliminary design to be undertaken. It provides a single procedure allowing quicker and lower cost qualification compared to multiple bi-lateral qualification against different bespoke user needs. This document focuses on developing B-basis design allowables.

1.2 The procedure comprises a standard qualification plan (SQP) that includes the minimum common test requirements for more highly anisotropic composite materials. Further test requirements are encompassed in an extended qualification plan (EQP), which includes options representing specific in-service features. A reduced qualification plan (RQP) scheme, using the same core structure of test plate preparation and test methods as the SQP, is available for less highly anisotropic and tending towards nominally isotropic composite materials.

1.3 The procedure is suitable for fibre-reinforced thermoset, and thermoplastic, based material systems intended for structural or semi-structural applications. Individual test method standards referred to in this document provide more details as to the classes and types of composite materials that are covered in each case.

1.4 Annexes A and B are included to support presentation of the data obtained in a consistent database and to provide statistical procedures for the determination of B-basis design allowables, respectively.

2 Normative references

The following documents are referred to in the text in such a way that some or all of their content constitutes requirements of this document. For dated references, only the edition cited applies. For undated references, the latest edition of the referenced document (including any amendments) applies.

ISO 62, *Plastics — Determination of water absorption*

ISO 75-3, *Plastics — Determination of temperature of deflection under load — Part 3: High-strength thermosetting laminates and long-fibre-reinforced plastics*

ISO 291, *Plastics — Standard atmospheres for conditioning and testing*

ISO 527-4, *Plastics — Determination of tensile properties — Part 4: Test conditions for isotropic and orthotropic fibre-reinforced plastic composites*

ISO 527-5, *Plastics — Determination of tensile properties — Part 5: Test conditions for unidirectional fibre-reinforced plastic composites*

ISO 1172, *Textile-glass-reinforced plastics — Prepregs, moulding compounds and laminates — Determination of the textile-glass and mineral-filler content — Calcination methods*

ISO 1183 (all parts), *Plastics — Methods for determining the density and relative density of non-cellular plastic*

© ISO 2019 – All rights reserved

ISO 1268 (all parts), *Fibre-reinforced plastics — Methods of producing test plates*

ISO 1675, *Plastics — Liquid resins — Determination of density by the pyknometer method*

ISO 2818, *Plastics — Preparation of test specimens by machining*

ISO 6603-2, *Plastics — Determination of puncture impact behaviour of rigid plastics — Part 2: Instrumented impact testing*

ISO 6721-11, *Plastics — Determination of dynamic mechanical properties — Part 11: Glass transition temperature*

ISO 9782, *Plastics — Reinforced moulding compounds and prepregs — Determination of apparent volatile-matter content*

ISO 10119, *Carbon fibre — Determination of density*

ISO 10352, *Fibre-reinforced plastics — Moulding compounds and prepregs — Determination of mass per unit area*

ISO 11357-1, *Plastics — Differential scanning calorimetry (DSC) — Part 1: General principles Differential scanning calorimetry (DSC) — Part 1: General principles*

ISO 11357-2, *Plastics — Differential scanning calorimetry (DSC) — Part 2: Determination of glass transition temperature and glass transition step height*

ISO 11359-2, *Plastics — Thermomechanical analysis (TMA) — Part 2: Determination of coefficient of linear thermal expansion and glass transition temperature*

ISO 11667, *Fibre-reinforced plastics — Moulding compounds and prepregs — Determination of resin, reinforced-fibre and mineral-filler content — Dissolution methods*

ISO 12815, *Fibre-reinforced plastic composites — Determination of plain-pin bearing strength*

ISO 12817, *Fibre-reinforced plastic composites — Determination of open-hole compression strength*

ISO 14125, *Fibre-reinforced plastic composites — Determination of flexural properties*

ISO 14126, *Fibre-reinforced plastic composites — Determination of compressive properties in the in-plane direction*

ISO 14127, *Carbon-fibre-reinforced composites — Determination of the resin, fibre and void contents*

ISO 14129, *Fibre-reinforced plastic composites — Determination of the in-plane shear stress/shear strain response, including the in-plane shear modulus and strength, by the plus or minus 45 degree tension test method*

ISO 14130, *Fibre-reinforced plastic composites — Determination of apparent interlaminar shear strength by short-beam method*

ISO 15024, *Fibre-reinforced plastic composites — Determination of mode I interlaminar fracture toughness, GIC, for unidirectionally reinforced materials*

ISO 15034, *Composites — Prepregs — Determination of resin flow*

ISO 15040, *Composites — Prepregs — Determination of gel time*

ISO 15114, *Fibre-reinforced plastic composites — Determination of the mode II fracture resistance for unidirectionally reinforced materials using the calibrated end-loaded split (C-ELS) test and an effective crack length approach*

ISO 16012, *Plastics — Determination of the linear dimensions of specimens*

© ISO 2019 – All rights reserved

ISO 18352, *Carbon-fibre-reinforced plastics — Determination of compression-after-impact properties at a specified impact-energy level*

EN 821-1, *Advanced technical ceramics — Monolithic ceramics — Thermo-physical properties — Part 1: Determination of thermal expansion*

EN 2823, *Aerospace series — Fibre reinforced plastics — Determination of the effect of exposure to humid atmosphere on physical and mechanical characteristics*

ASTM D5766, *Fibre-reinforced plastic composites — Determination of the open-hole, tensile strength*

3 Terms and definitions

For the purposes of this document, the following terms and definitions apply.

ISO and IEC maintain terminological databases for use in standardization at the following addresses:

— ISO Online browsing platform: available at https://www.iso.org/obp

— IEC Electropedia: available at http://www.electropedia.org/

3.1
preimpregnate
prepreg
material in thin sheets of tows, tape, fabric, or mat impregnated with resin ready to be moulded, and cured if thermoset based

Note 1 to entry: It may be stored before use (normally refrigerated for thermoset based systems).

Note 2 to entry: Used as a generic term in this document to refer to an intermediate product requiring application of pressure and/or heat to form the final product.

3.2
compound
intimate admixture of a polymer or polymers with other ingredients such as reinforcements, fillers, plasticizers, catalysts and colorants ready to be formed, and cured if thermoset based

3.3
preform
dry fibre preform suitable for infiltration by the matrix, normally thermoset based, to provide the final material

3.4
batch
quantity of material formed during the same process and having identical characteristics throughout based on a single supply of fibres, matrices and other additives

3.5
manufacturing run
single manufacturing process for test plates run by a single operator at a single time

3.6
plate and specimen coordinate axes
1-axis (or direction) where the material contains a known axis of preferred fibre orientation (e.g. dominant fibre direction for unidirectional prepregs)

Note 1 to entry: For materials prepared as test plates, the in-plane direction transverse to the 1-axis is defined as the 2-axis. Where any direction of preferred orientation is not known, the 1-axis is taken as the production direction of the composite or the reinforcement (e.g. warp directions for fabrics).

© ISO 2019 – All rights reserved

Note 2 to entry: For fully unidirectional materials, specimens cut parallel to the “1”-direction, results are identified by the subscript “11” (e.g. E11). Similarly, for specimens cut parallel to the “2”-direction are identified by the subscript “22” (e.g. E22). For multidirectional laminates, mats and fabrics, results are identified by the subscripts “XX” and “YY” for specimens cut parallel to the X and Y directions respectively. The X, Y and Z coordinate system for any material are equated to the “1”-, “2”- and “3”- directions.

Note 3 to entry: A scheme for designating multiple direction lay-ups is given in the ISO 1268-4:2005, Annex A.

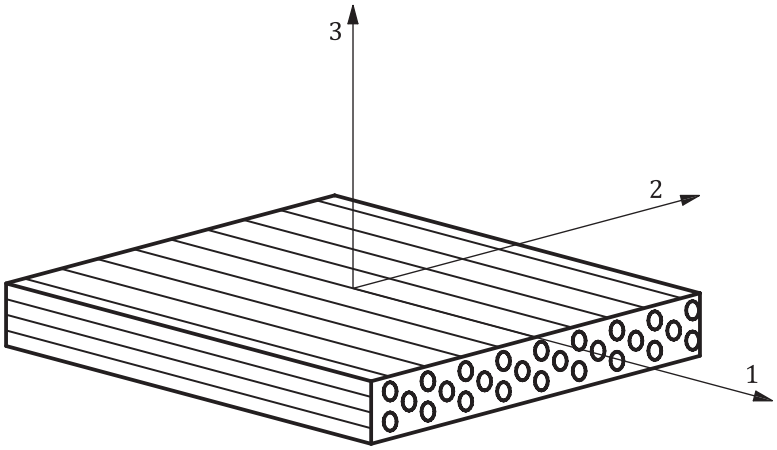

Figure 1 — Unidirectional reinforced composite plate element showing orthogonal axes

3.7
A-basis design allowable
statistically-based material property with a 95 % lower confidence bound on the first percentile of a specified population of measurements

Note 1 to entry: It is also a 95 % lower tolerance bound for the upper 99 % of a specified population.

3.8
B-basis design allowable
statistically-based material property with a 95 % lower confidence bound on the tenth percentile of a specified population of measurements

Note 1 to entry: It is also a 95 % lower tolerance bound for the upper 90 % of a specified population.

4 Principle

To provide an initial “standard qualification plan" based on accepted international test methods, in combination with specified material preparation and batch test requirements. The standard qualification plan (SQP) provides a minimum data set for the initial materials release suitable for material selection and preliminary design phases, using a B-basis design allowable. The SQP is suitable for high quality /high anisotropy preimpregnates (prepregs). An RQP allows less highly anisotropic materials to be more easily and quickly evaluated. The EQP provides test methods for coupon level tests for assessing simulated service requirements, such as, resistance to strain-concentrations (e.g. a hole) and simulated damage.

NOTE It is noted that for A-basis design allowables, the number of specimens is increased to the order of 100 times, using increased number of batches and/or manufacturing runs depending on the sensitivity of the measured properties to these two factors[2].

5 Test methods and specimen conditioning

Tables 1 and 2 specify the properties, test methods/applicable standards and batches to be used in the SQP/RQP. Table 3 provides the same information for the EQP. The full title of each standard is given in Clause 2. In addition, Tables 2 and 3 give “non-room temperature” test conditions, including after hot

© ISO 2019 – All rights reserved