INTERNATIONAL STANDARD

ISO 20346

Third edition
2021-12

Personal protective equipment — Protective footwear

Équipement de protection individuelle — Chaussures de protection

Reference number
ISO 20346:2021(E)

© ISO 2021



COPYRIGHT PROTECTED DOCUMENT

© ISO 2021

All rights reserved. Unless otherwise specified, or required in the context of its implementation, no part of this publication may be reproduced or utilized otherwise in any form or by any means, electronic or mechanical, including photocopying, or posting on the internet or an intranet, without prior written permission. Permission can be requested from either ISO at the address below or ISO's member body in the country of the requester.

ISO copyright office
CP 401 • Ch. de Blandonnet 8
CH-1214 Vernier, Geneva
Phone: +41 22 749 01 11
Email: copyright@iso.org
Website: www.iso.org

Published in Switzerland

© ISO 2021 – All rights reserved

Contents

Page

Foreword ..... **v**

1 Scope **1**

2 Normative references **1**

3 Terms and definitions **1**

4 Classification and designs **8**

5 Basic requirements for protective footwear **9**
5.1 General 9
5.2 Design 12
5.2.1 General 12
5.2.2 Height of upper 12
5.2.3 Heel area 12
5.3 Whole footwear 13
5.3.1 Constructional performance 13
5.3.2 Toe protection 13
5.3.3 Leak proofness 15
5.3.4 Specific ergonomic features 15
5.3.5 Slip resistance 15
5.3.6 Innocuousness 16
5.3.7 Seam strength 16
5.4 Upper 16
5.4.1 General 16
5.4.2 Thickness 17
5.4.3 Tear strength 17
5.4.4 Tensile properties 18
5.4.5 Flexing resistance 18
5.4.6 Water vapour permeability and coefficient 18
5.4.7 Resistance to hydrolysis 18
5.5 Lining 19
5.5.1 General 19
5.5.2 Tear strength 19
5.5.3 Abrasion resistance 19
5.5.4 Water vapour permeability and coefficient 19
5.6 Tongue 19
5.6.1 General 19
5.6.2 Tear strength 20
5.7 Insole, insock and footbed 20
5.7.1 Thickness 20
5.7.2 Water permeability 20
5.7.3 Water absorption and desorption 20
5.7.4 Abrasion resistance 20
5.8 Outsole 20
5.8.1 General 20
5.8.2 Design 21
5.8.3 Tear strength 21
5.8.4 Abrasion resistance 21
5.8.5 Flexing resistance 22
5.8.6 Resistance to hydrolysis 22
5.8.7 Interlayer bond strength 22

6 Additional requirements for protective footwear **22**
6.1 General 22
6.2 Whole footwear 23
6.2.1 Perforation resistance 23

© ISO 2021 – All rights reserved

6.2.2 Electrical properties 26
6.2.3 Resistance to inimical environments 26
6.2.4 Energy absorption of seat region 26
6.2.5 Water resistance 26
6.2.6 Metatarsal protection 27
6.2.7 Ankle protection 27
6.2.8 Cut resistance 28
6.2.9 Scuff cap abrasion 28
6.2.10 Slip resistance 28
6.3 Upper — Water penetration and absorption 28
6.4 Outsole 29
6.4.1 Resistance to hot contact 29
6.4.2 Resistance to fuel oil 29
6.4.3 Ladder grip 29

7 Marking 29

8 Manufacturer's instructions and information 30
8.1 General 30
8.2 Electrical properties 31
8.2.1 Partially conductive footwear 31
8.2.2 Antistatic footwear 32
8.3 Insocks 32
8.4 Perforation resistance 32
8.5 Date of obsolescence 33

Annex A (normative) **Customized protective footwear (protective footwear adapted to fit an individual user or a single unit to fit an individual user)** **34**

Annex B (informative) **Assessment of the footwear by the wearer** **38**

Annex C (informative) **Slip resistance** **40**

Bibliography **43**

© ISO 2021 – All rights reserved

Foreword

ISO (the International Organization for Standardization) is a worldwide federation of national standards bodies (ISO member bodies). The work of preparing International Standards is normally carried out through ISO technical committees. Each member body interested in a subject for which a technical committee has been established has the right to be represented on that committee. International organizations, governmental and non-governmental, in liaison with ISO, also take part in the work. ISO collaborates closely with the International Electrotechnical Commission (IEC) on all matters of electrotechnical standardization.

The procedures used to develop this document and those intended for its further maintenance are described in the ISO/IEC Directives, Part 1. In particular the different approval criteria needed for the different types of ISO documents should be noted. This document was drafted in accordance with the editorial rules of the ISO/IEC Directives, Part 2 (see www.iso.org/directives).

Attention is drawn to the possibility that some of the elements of this document may be the subject of patent rights. ISO shall not be held responsible for identifying any or all such patent rights. Details of any patent rights identified during the development of the document will be in the Introduction and/or on the ISO list of patent declarations received (see www.iso.org/patents).

Any trade name used in this document is information given for the convenience of users and does not constitute an endorsement.

For an explanation on the voluntary nature of standards, the meaning of ISO specific terms and expressions related to conformity assessment, as well as information about ISO's adherence to the World Trade Organization (WTO) principles in the Technical Barriers to Trade (TBT) see the following URL: www.iso.org/iso/foreword.html.

ISO 20346 was prepared by the European Committee for Standardization (CEN) Technical Committee CEN/TC 161, *Foot and leg protectors*, in collaboration with ISO Technical Committee ISO/TC 94, *Personal safety — Protective clothing and equipment*, Subcommittee SC 3, *Foot protection*, in accordance with the Agreement on technical cooperation between ISO and CEN (Vienna Agreement).

This third edition cancels and replaces the second edition (ISO 20346:2014), which has been technically revised. The main changes compared to the previous edition are as follows:

— revision of the terms and definitions Clause 3;

— Figures 1 to Figure 4 revised;

— Tables 1, 2 and 3 revised;

— heel area defined (5.2.3);

— toe protection, depending on ISO 22568 - 1 and ISO 22568 -2, exchanging EN 12568:2010;

— requirement on slip resistance revised (5.3.5 and 6.2.10); marking “SRA”, “SRB” and “SRC” deleted; marking “SR” and “Ø” introduced;

— pH value and chromium VI tests added in 5.3.6; former separate clauses under upper, lining, tongue and insole/insock deleted;

— requirement for seam strength of hybrid footwear added (5.3.7);

— requirement for upper materials not fulfilling WVP explained (5.4.6);

— abrasion of insoles revised (5.7.4);

— outsole requirements revised (5.8);

— outsole thickness revised (5.8.2.1);

© ISO 2021 – All rights reserved

— flexing resistance of outsole clarified (5.8.5);

— perforation resistant insert, depending on ISO 22568-3 and ISO 22568-4, exchanging EN 12568:2010;

— tolerance added (6.2.3.1);

— former Annex A Hybrid Footwear included in the general text (Table 2, 5.4.1.2);

— optional requirement of metatarsal protection revised (6.2.6);

— optional requirement on ankle protection clarified (6.2.7);

— optional requirement for “SC” scuff caps added (6.2.9);

— water penetration and absorption, symbol “WRU” deleted, symbol “WPA” introduced;

— optional requirement for “LG” Ladder grip of outsoles added (6.4.3);

— marking revised (Table 16 and Table 20);

— two new categories added, P6 and P7 (Table 20);

— information on obsolescence date added (8.5);

— Annex A with requirements for customized protective footwear added;

— Annex B assessment of the footwear by the wearer added;

— Annex C Slip resistance added;

— requirement for electrically insulating footwear (EN 50321) deleted.

Any feedback or questions on this document should be directed to the user’s national standards body. A complete listing of these bodies can be found at www.iso.org/members.html.

© ISO 2021 – All rights reserved

Personal protective equipment — Protective footwear

1 Scope

This document specifies basic and additional (optional) requirements for protective footwear used for general purpose. It includes, for example, mechanical risks, slip resistance, thermal risks, ergonomic behaviour. It includes, for example, mechanical risks, slip resistance, thermal risks, ergonomic behaviour. It also specifies requirements for protective footwear equipped with customized insocks, customized protective footwear or individual manufactured customized protective footwear. This standard does not cover the property of high visibility because of interaction with the clothing (e.g. trousers cover the footwear) and work area conditions (e.g. dirt, mud).

Special risks are covered by complementary job-related standards (e.g. footwear for firefighters, electrical insulating footwear, protection against chain saw injuries, protection against chemicals and molten metal splash, protection for motorcycle riders).

2 Normative references

The following documents are referred to in the text in such a way that some or all of their content constitutes requirements of this document. For dated references, only the edition cited applies. For undated references, the latest edition of the referenced document (including any amendments) applies.

The following referenced documents are indispensable for the application of this document.

ISO 20344:2021, *Personal protective equipment — Test methods for footwear*

ISO 22568-1:2019, *Foot and leg protectors — Requirements and test methods for footwear components — Part 1: Metallic toecaps*

ISO 22568-2:2019, *Foot and leg protectors — Requirements and test methods for footwear component — Part 2: Non-metallic toecaps*

EN 13832-3:2018, *Footwear protecting against chemicals — Part 3: Requirements for footwear highly resistant to chemicals under laboratory conditions*

3 Terms and definitions

For the purposes of this document, the following terms and definitions apply.

ISO and IEC maintain terminological databases for use in standardization at the following addresses:

— ISO Online browsing platform: available at https://www.iso.org/obp

— IEC Electropedia: available at https://www.electropedia.org/

Note 1 to entry The component parts of footwear are illustrated in Figure 1, 2 and 3.

Note 2 to entry Further terms and definitions can be found in ISO 19952[1].

3.1
protective footwear
footwear incorporating protective features to protect the wearer from injuries that could arise through accidents

Note 1 to entry: Items of protective footwear are fitted with toecaps designed to give protection against impact of at least 100 J and against compression of at least 10 kN.

© ISO 2021 – All rights reserved

3.2
upper
part or parts of a shoe that cover the toes, the top of the foot, the sides of the foot, and the back of the heel; it is attached to the outsole of a footwear.

3.3
leather
hide or skin tanned to be imperishable

3.3.1
leather split
flesh or middle part of a hide or skin, obtained by splitting a thick *leather* (3.3) which is tanned to be imperishable

3.4
rubber
type of elastic *polymeric material* (3.5) which can be vulcanized

3.5
polymeric material
large molecules composed of repeating structural units (monomers) typically connected by chemical bond

EXAMPLE Polyurethane (PU) or polyvinylchloride (PVC).

3.6
insole
non-removable component used to form the base of the shoe to which the *upper* (3.2) is usually attached during lasting

3.7
insock
removable or non-removable footwear component used to cover completely the *insole* (3.6)

3.7.1
seat sock
removable or non-removable footwear component used to cover the *insole* (3.6) in the heel area

3.7.2
footbed
insock (3.7) designed according to the sole of the foot with or without the aim of correcting the posture

Note 1 to entry: “Non-removable” means that the component cannot be removed without any damage.

Note 2 to entry: “Removable” means that the component can be removed, but the protective features are only maintained when it is placed into the footwear.

3.8
lining
material covering the inner surface of the footwear

Note 1 to entry: The wearer’s foot is in direct contact with the lining.

Note 2 to entry: Where an upper is split at the forepart to house the toecap, or if an external piece of material is stitched to the upper to form a pocket to house the toecap, the material under the toecap acts as a lining.

3.9
cleat
protruding part of the outer surface of the outsole

© ISO 2021 – All rights reserved

3.10
outsole
outermost part to provide footwear with the necessary traction and protection from the floor surfaces it will be in contact with

3.10.1
rigid outsole
outsole, which can be bent less than an angle of 45° under a load of 30 N

Note 1 to entry: According to ISO 20344:2021; 8.5.

3.10.2
multi-layer outsole
made up of two or more material layers completely covering the entire surface; a tread cover of less than 0,5 mm is not considered a layer

3.11
perforation resistant insert
component, placed in the outsole complex or used as an *insole* (3.6) simultaneously in order to provide protection against perforation

3.12
protective toecap
built-in footwear component designed to protect the toes of the wearer from impacts and compression

3.13
scuff caps
abrasion resistant materials or component to protect against scuff of the upper external toe region during kneeling activities

3.14
heel area
counter (stiffener) area, rear part of the footwear

3.15
partially conductive footwear
footwear with low electrical resistance between the wearer and the ground, able to dissipate some static electricity

3.16
antistatic footwear
footwear maintaining some electrical resistance between the wearer and the ground, able to dissipate some static electricity

3.17
fuel oil
aliphatic hydrocarbon constituent of petroleum

3.18
customized protective footwear
covering all individual customized footwear and other specific conditions of a foot.

Note 1 to entry: They integrate in their design the recipient's own physiognomy and the specific arrangements aimed at modifying, correcting, compensating, curing, preventing, relieving a pathology, e.g. overweight, diabetes, hyperhidrosis, misalignments etc. …

Note 2 to entry: Several types of customized protective footwear and footwear adaptions exist:

Type 1 — equipped with customized insocks

© ISO 2021 – All rights reserved

Protective footwear (according to this document) incorporating customized insocks adapted to the wearers needs.

Type 2 — modified protective footwear

protective footwear (according to this document) modified from its original construction to fit to an individual user.

See examples in ISO 21064:2017, 6.4[3]

Type 3 — Bespoke protective footwear

Protective footwear (according to this document) constructed as a single unit to fit an individual user.

See examples in ISO 21064:2017, 6.3.2 and 6.3.3[3]

Note 3 to entry: Adapted to fit an individual user or a single unit to fit an individual user.

Note 4 to entry: According to ISO 21064:2017, 3.2.[3]

3.19
hybrid footwear
footwear that cannot be classified as footwear of class I or II

Note 1 to entry: There are two types of hybrid footwear (other than design E boots) see 3.19.1 and 3.19.2.

3.19.1
hybrid "moulded" footwear
vulcanized rubber or all moulded polymeric foot section integrally moulded around the toecap and often including the outsole, which can be unlined and usually does not incorporate an *insole* (3.6).

3.19.2
hybrid "mounted" footwear
vulcanized rubber or all moulded polymeric foot section that is manufactured separately and then constructed around a conventionally lasted *lining* (3.8)/*insole* (3.6) construction and often with a separately attached *outsole* (3.10).

© ISO 2021 – All rights reserved

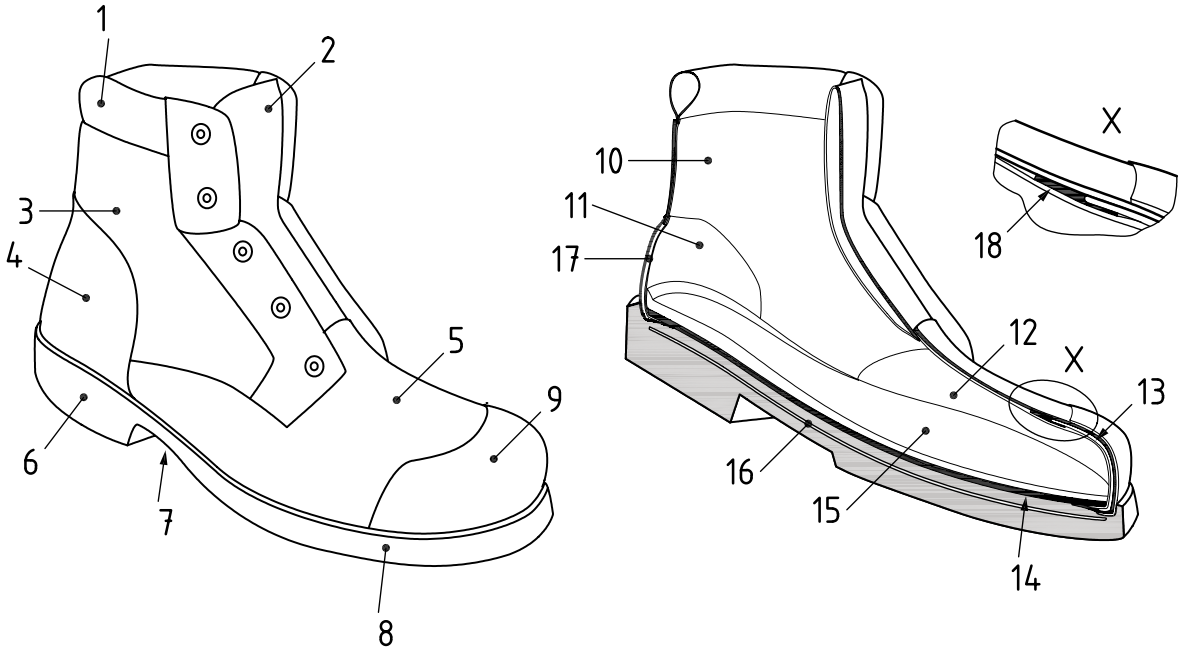

Key

1	collar	10	quarter lining
2	tongue	11	counter lining
3	upper – quarter	12	vamp lining
4	upper - counter	13	protective toecap
5	upper - vamp	14	insole
6	outsole – heel	15	insock/footbed
7	outsole – waist	16	perforation resistant insert
8	outsole – forepart	17	counter stiffener
9	scuff cap	18	toecap back edge covering

Figure 1 — Example parts of class I protective footwear

© ISO 2021 – All rights reserved

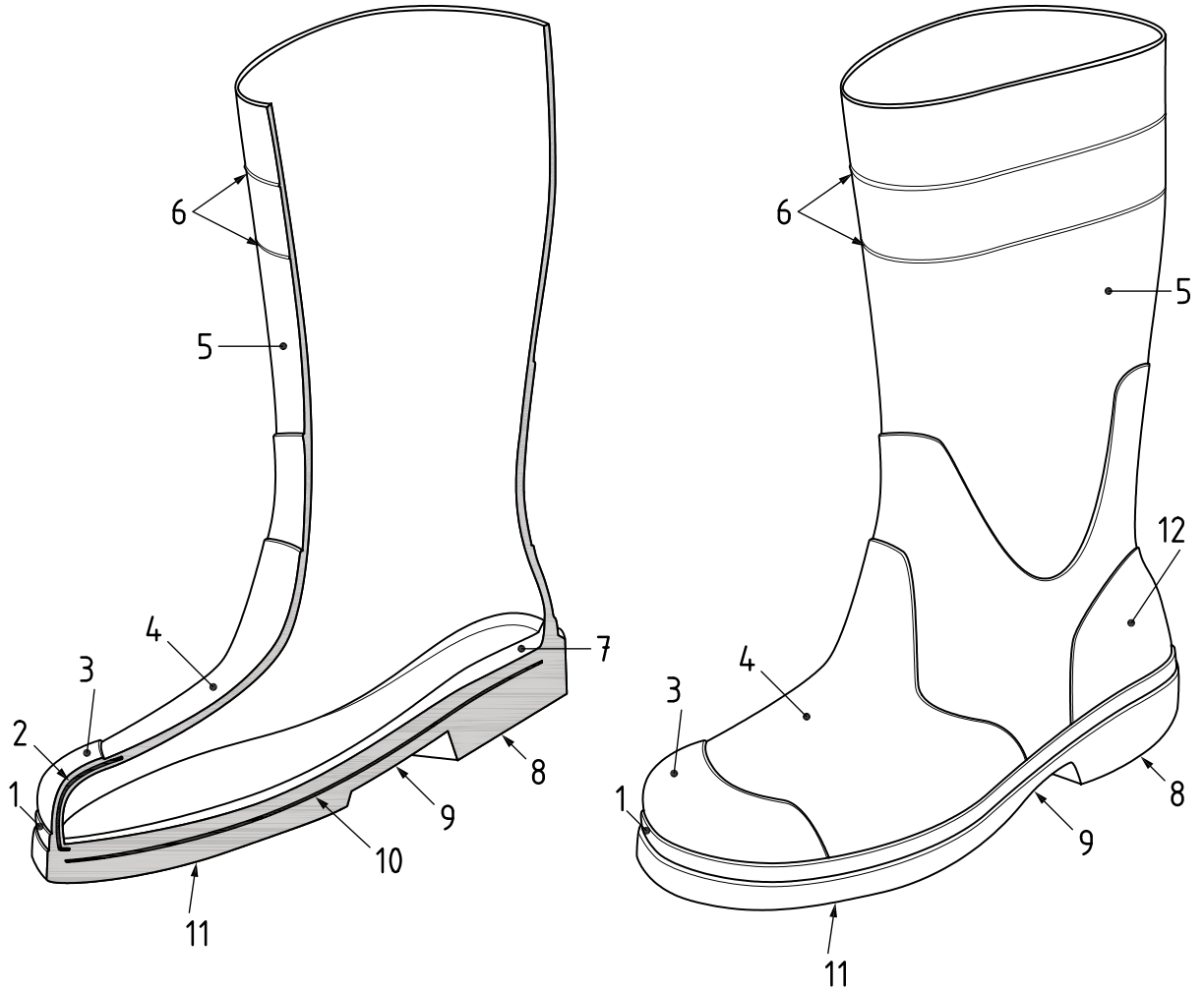

Key

1	foxing strip	7	insock/footbed
2	protective toecap	8	outsole – heel
3	scuff cap	9	outsole – waist
4	upper – vamp	10	perforation resistant insert
5	upper – shaft	11	outsole – forepart
6	trim marks	12	upper - counter

Figure 2 — Example parts of Class II protective footwear

© ISO 2021 – All rights reserved

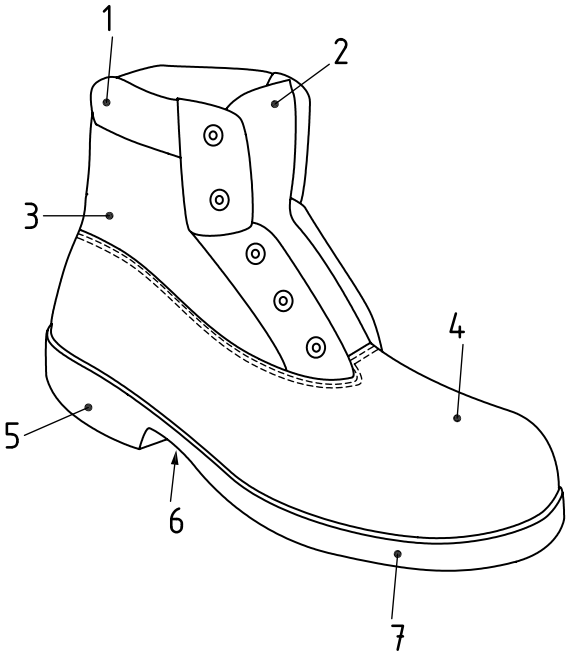

a) Example of hybrid safety footwear in general

© ISO 2021 – All rights reserved

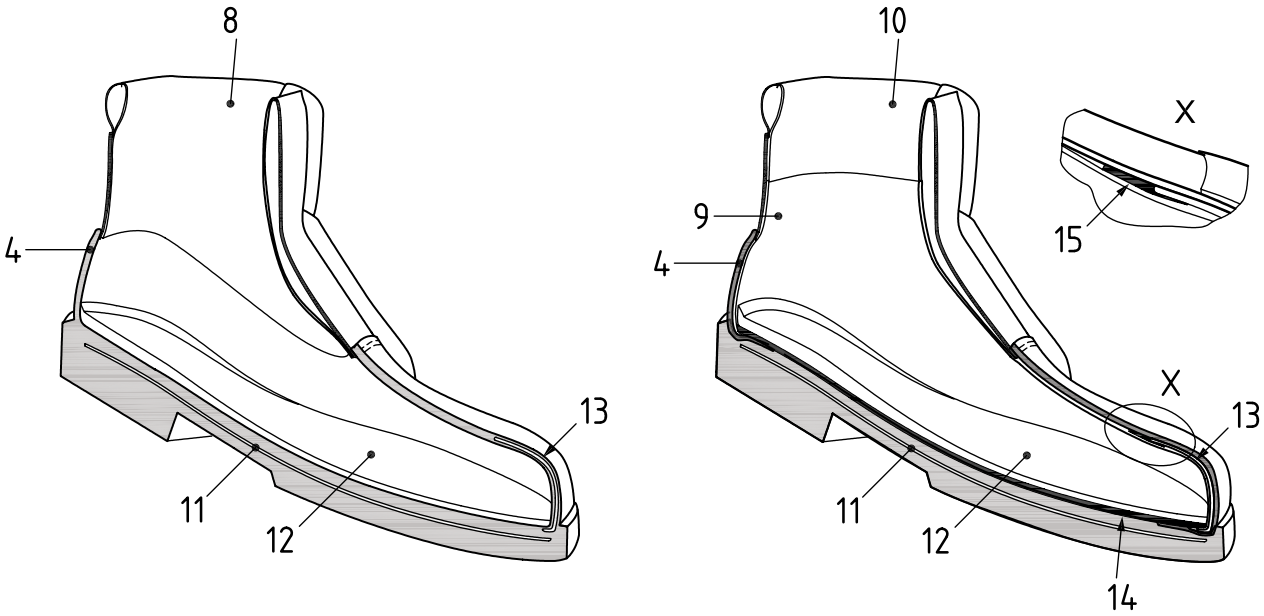

b) Hybrid moulded (entirely moulded lower section) **c) Hybrid mounted (separately attached sole unit)**

Key

1 collar
2 tongue
3 upper leather or fabric section
4 upper moulded rubber or polymeric part
5 outsole – heel
6 outsole – waist
7 outsole – forepart
8 lining
9 foot section lining
10 collar lining
11 perforation resistant insert
12 insock/footbed
13 protective toecap
14 insole
15 toecap back edge covering

Figure 3 — Example parts of hybrid protective footwear

4 Classification and designs

Protective footwear shall be classified in accordance with Table 1. Designs of footwear are illustrated in Figure 4.

Table 1 — Classification of footwear

Classification	Description
Class I	Footwear made from leather and other materials, excluding all-rubber or all-polymeric footwear (see Figure 1)
Class II	All-polymeric (i.e. entirely moulded) including all-rubber (i.e. entirely vulcanized)footwear (see Figure 2)
Hybrid footwear	See 3.19 (see Figure 3)

© ISO 2021 – All rights reserved